INSTRUCTIONS FOR CONTINUED AIRWORTHINESS

GAS BALLOON
MODEL NL - STU

EASA.DE.21G.0007
EASA.DE.CAO.0088

Ballonbau Wörner GmbH www.ballonbau.de

Flughafenstraße 20
86169 AUGSBURG
Deutschland

T: +49 (0)821/450 406 0
F: +49 (0)821/419 641
E: info@ballonbau.de

INSTRUCTIONS FOR CONTINUED AIRWORTHINESS

For Gas Balloons Model NL-STU

Issue 1 – Revision 6

March 2023

Nationality and registration sign	_____
Model	_____
Serial number	_____
Year of manufacture	_____
Manufacturer	**Ballonbau Wörner GmbH** Flughafenstraße 20 86169 Augsburg Germany

0.1 Revision Log

Note: All changes of the Instructions for Continued Airworthiness made by the Manufacturer will be submitted for acceptance, in so far they are liable to certification, to the EASA and to the FAA and afterwards sent to each known owner of a balloon of model NL-STU, or made accessible via Internet.

Revision	Paragraphs	Pages	Date of Issue	Approved by
Initial Issue	4 - Airworthiness Limitations Section	42+43	December, 03, 2013	EASA No. 10047322
1	Table of Contents Revision Log 2.0 Performance of Preventive Maintenance 2.2 Envelope 2.8 Check after 10 flights 2.9 Checklist after 10 flights or after hard landing 3.1 Check of Integrity 5.1.5 Items of inspection	3 7 17 19 35 35 41 54	December 18, 2013	M.Wörner for and on behalf of Ballonbau Wörner GmbH
2	Table of Contents Revision Log 1.1.3 Basket 2.1.3 Basket 2.4 Basket 5.3 Basket inspection 6.3 Basket Annex 1: Ultramagic TEKNO Basket	6 7 13 18 28 58 76 A1 1-6	May 05, 2014	EASA No. 10049311 of May 28, 2014
3	Revision Log 5.1.1.4 Porosity Test 5.1.2.4 Porosity Test 5.1.3.4 Porosity Test 5.4 Rope Inspection 6.1.2.1 Detached joint cover tapes	7 48 50 51 58 74	September 09, 2014 and August 10, 2015	M.Wörner for and on behalf of Ballonbau Wörner GmbH
4	Table of Contents Revision Log 1.1.3 Basket 2.1.3 Basket 2.4 Basket 2.4.1 Allowable damage limitations 2.4.2 Permissible repair work Checklist after 10 Flights or Hard landing	3+4+5+6 7+8 14 19 30 32 33 41+42	July 25, 2016	EASA No. 10059371 of Sept. 12, 2016

Revision	Paragraphs	Pages	Date of Issue	Approved by
4	5.3 Basket inspection Checklist for annual inspections 6.3.10 Fabric wall cover 6.3.11 Belt stiffening 6.3.12 Basket tube frame Kapitel 7 - Teileliste	60+61 70+71 84 84 84 87	July 25, 2016	EASA No. 10059371 of Sept. 12, 2016
5	Numbering of pages	all	Dec. 2016	M. Wörner for and on behalf of Ballonbau Wörner GmbH
6	Change of address 0.1 Revision Log 0.2 List of effective pages 5.6 Instrument inspection	Front pages II III 5.17	March 2023	10081795/ April 27, 2023

0.2 List of effective Pages

Chapter	Page	Date	30	Chapter	Page	Date
0	I	01.12.2016		4 anerk.	4.1	01.12.2016
	II	27.04.2023			4.2	01.12.2016
	III	27.04.2023		5 anerk.	5.1	30.03.2023
	IV	01.12.2016			5.2	30.03.2023
	V	01.12.2016			5.3	30.03.2023
	VI	01.12.2016			5.4	30.03.2023
	VII	01.12.2016			5.5	30.03.2023
1	1.1	01.12.2016			5.6	30.03.2023
	1.2	01.12.2016			5.7	30.03.2023
	1.3	01.12.2016			5.8	30.03.2023
	1.4	01.12.2016			5.9	30.03.2023
	1.5	01.12.2016			5.10	30.03.2023
	1.6	01.12.2016			5.11	30.03.2023
	1.7	01.12.2016			5.12	30.03.2023
	1.8	01.12.2016			5.13	30.03.2023
	1.9	01.12.2016			5.14	30.03.2023
2 anerk.	2.1	01.12.2016			5.15	30.03.2023
	2.2	01.12.2016			5.16	30.03.2023
	2.3	01.12.2016			5.17	27.04.2023
	2.4	01.12.2016			5.18	30.03.2023
	2.5	01.12.2016			5.19	30.03.2023
	2.6	01.12.2016			5.20	30.03.2023
	2.7	01.12.2016			5.21	30.03.2023
	2.8	01.12..2016			5.22	30.03.2023
	2.9	01.12.2016			5.23	30.03.2023
	2.10	01.12.2016			5.24	30.03.2023
	2.12	01.12.2016			5.25	30.03.2023
	2.13	01.12.2016			5.26	30.03.2023
	2.14	01.12.2016			5.27	30.03.2023
	2.15	01.12.2016			5.28	30.03.2023
	2.16	01.12.2016		6	6.1	01.12.2016
	2.17	01.12.2016			6.2	01.12.2016
	2.18	01.12.2016			6.3	01.12.2016
	2.19	01.12.2016			6.4	01.12.2016
	2.20	01.12.2016			6.5	01.12.2016
	2.21	01.12.2016			6.6	01.12.2016
	2.22	01.12.2016			6.7	01.12.2016
	2.23	01.12.2016			6.8	01.12.2016
	2.24	01.12.2016			6.9	01.12.2016
	2.25	01.12.2016			6.10	01.12.2016
	2.26	01.12.2016			6.11	01.12.2016
3	3.1	01.12.2016		7	7.1	01.12.2016
					7.2	01.12.2016
					7.3	01.12.2016

Table of Contents

Chapter 1 – Introduction

Around 1920, the first netless balloons were used for international competitions, especially for the Gordon-Bennett race. These balloons were manufactured individually, and never went into series production. The netless balloons of that time were equipped with the traditional rip panel for quick deflation, and with the flap valve.

Modern netless gas balloons are type-certificated since 1993. In these balloons the tasks of rip panel and valve are combined in the parachute. The net of the traditional gas balloon was replaced by the use of the load belt. The netless gas balloon is very user-friendly due to its more simple inflation method, and because time-consuming closing of the rip panel after each deflation is no longer necessary.
The ballast stock on board also could be increased, because the weight load of flap valve and net no longer exist. All this has led to an increase of safety in normal pleasure flights, and also improved the long-distance capacity in sport flights.

1.0 General information

This manual contains instructions for preventive maintenance and annual inspection and repair.

It applies to the following models:

NL – 280 / STU
NL – 380 / STU
NL – 510 / STU
NL – 640 / STU
NL – 840 / STU
NL – 1000 / STU

The identification plate contains the manufacturer, model, registration number, serial number and year of construction.

It is attached to the

- envelope, on a stainless steel plate at the clamping ring of the appendix
- load ring, on a flexible tag
- basket, on a brass plate
-

It is essential that only materials or parts approved by Ballonbau Wörner GmbH are used for repair by authorized personnel and companies.

WARNING

During operation the owner / operator of the balloon is responsible for the airworthy condition of the balloon.

The maintenance and the inspection must be performed according to the procedures described in this manual.

Improper repair methods and test methods will cause the balloon to stay unairworthy or to become unairworthy. Make sure that the maintenance and inspection personnel are properly trained, equipped, and authorized.

1.1 Description of the balloon system

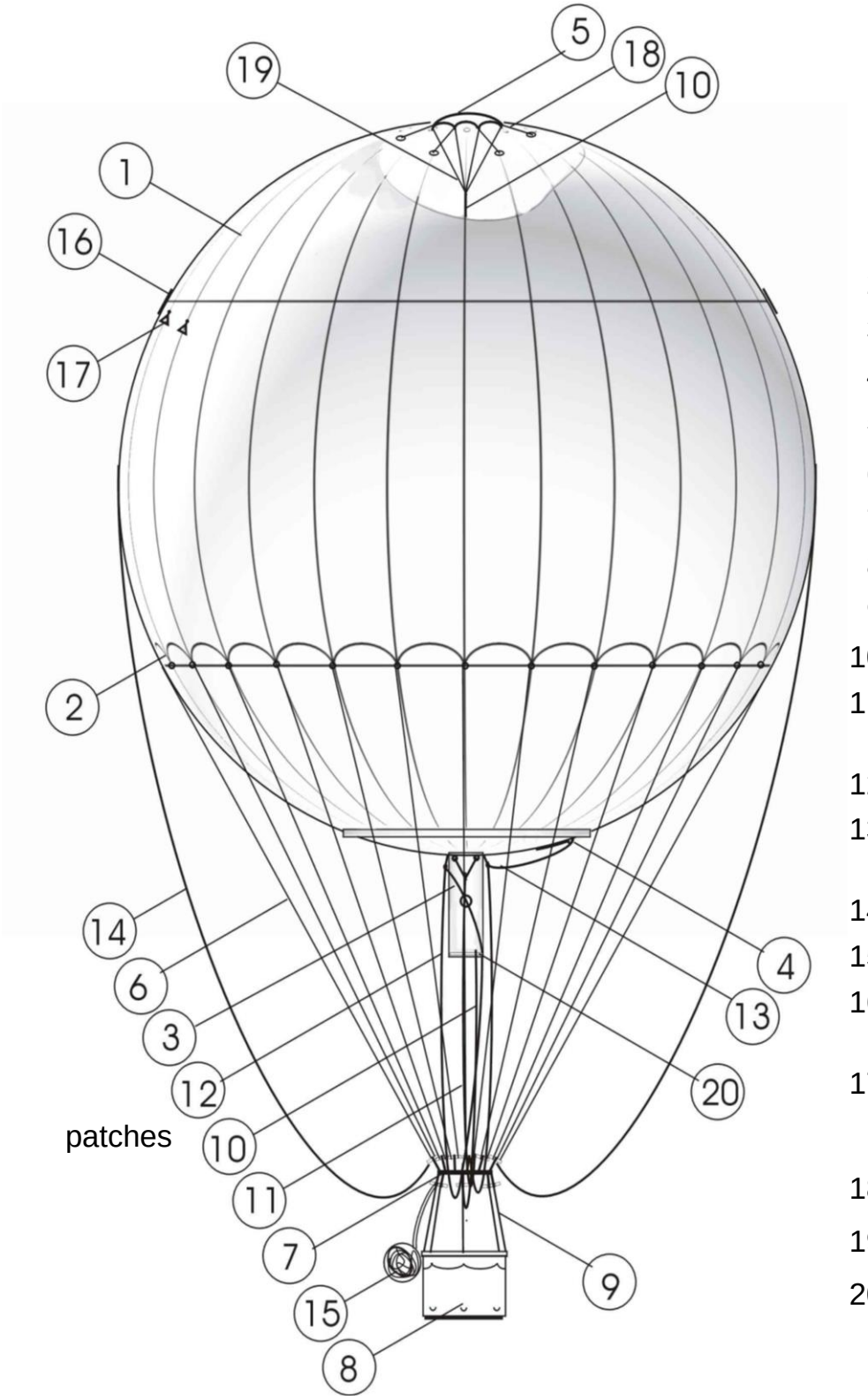

1 Envelope
2 Load belt
3 Appendix
4 Emergency opening
5 Parachute
6 Envelope ropes
7 Load ring
8 Basket
9 Basket ropes
10 Parachute rope
11 Appendix anchor ropes
12 Pull-close rope
13 Emergency opening rope
14 Holding ropes
15 Trail rope
16 Holding rope attachment
17 Holding down
18 Centering belt
19 Pull-down belt
20 Poeschel ring

1.1.1 Envelope

The envelope material consists of a layer of nylon fabric with rip-stop threads. On the inside and outside it is coated with artificial caoutchouc or with polyurethane. The inside coating is electrostatic conductive in order to distribute electrostatic charges uniformly over the whole envelope. The surface resistance is maximally 10^9 Ohm at the inside. Coatings of different colors are used for the outside.

Standard size	Number of panels	Maximum mass
up to 280 m³	18	325 kg
up to 380 m³	20	441 kg
up to 510 m³	22	591 kg
up to 640 m³	24	749 kg
up to 840 m³	26	974 kg
up to 1000 m³	28	1160 kg

1.1.2 Deflation opening

The deflation opening is located at the North Pole of the envelope, where it is sealed with a parachute. The edge of the deflation opening is protected against tearing in by a bolt rope made of stainless steel or Kevlar and is reinforced with several layers of fabric. The parachute is held in its correct position by means of centering belts. The parachute is pulled down for deflating of the balloon with the pull-down belts. The parachute also is used as a maneuvering vent.

1.1.3 Load belt

The load belt is attached to the envelope at half the height between the equator and the appendix. It consists of belt bows that end in stainless-steel rings. The belt bows serve for introducing the load from the envelope ropes uniformly into the envelope. The envelope ropes that lead to the load ring are hooked into the stainless steel rings.

1.1.4 Appendix

The appendix, a cylindrical tube made of balloon fabric, is attached at the bottom pole by means of two clamping rings. During a flight the appendix is open, so that the gas may expand in case of increasing temperature or decreasing outside pressure (e.g. ascent). The parachute rope runs from the balloon envelope through the appendix into the basket. The wooden ring attached at the lower end of the appendix, the so-called Poeschel-ring, always keeps the appendix open during flight. The appendix closing device consists of a rope that runs from the Poeschel-ring in a spiral around the appendix to the balloon envelope, from where it runs through a deflection thimble into the balloon basket and to the Poeschel-ring again. When this rope is pulled, the Poeschel-ring is turned horizontally and at the same time tilted upwards on one side. This closes the appendix, which is of advantage for intermediate landings, gusts, and for deflation.

The two appendix anchor lines run from the clamping rings to the basket. These ropes prevent the lower part of the envelope from turning into the upper one in case of a strong drop or in case the balloon is dragged along the ground.

1.1.5 Emergency opening

The emergency opening is an option for this balloon model.
The emergency opening is not working as a quick deflation device. The emergency opening is a substitute for the appendix.
If the balloon is equipped with an emergency opening, this opening is located above the appendix. The emergency opening is a triangular section of the envelope. The size approximately corresponds with the cross section of the appendix. If, for some reason or other, it should not be possible to open the appendix during flight, the emergency opening can be opened with the emergency opening rope, and the expanding gas can escape during flight.

1.1.6 Electrostatic charging

All the conductive parts of the balloon (surface resistance less than 10^9 Ohm), starting from the parachute over the envelope to the appendix and finally to the stainless steel ropes of the basket, must be connected in a conductive manner in order to prevent accidents resulting from electrostatic charging. (resistance of the connection less than 10^6 Ohm).

1.2 Load ring

The load ring forms the connection between the envelope ropes and the basket ropes. It consists of a welded steel pipe. Strops and toggles are spliced to the load ring to connect the suspension ropes and the basket ropes. For the trail rope there is a crow-foot that is formed from a rope with a loop and another rope with a toggle.

1.3 Basket

The basket-work and the reinforcement of the balloon basket consist of rattan pipe. The floor is stiffened and reinforced by ash wood laths (drag laths and cross laths).

The basket size depends on the number of persons. A basket floor area of 0.3 m² must be calculated for every person. For model NL-STU baskets for 1 to 6 persons are approved, depending on the envelope size.

The basket ropes are stainless steel cables with PVC coating. Every basket rope runs in a side wall, in the basket floor, and up again in the opposite side wall.

The lower basket corners and the drag side are protected against wear by leather caps. The upper basket edge often is padded with leather.

For performance flights, a light-weight 4-person basket or a light 2-person basket can be used. Each of the light baskets is equipped with a flap in one side wall.

1.4 Trail rope

The trail rope also known as drag rope is not prescribed as a part of the equipment, because the balloon does not have to be set up at a certain position before it is deflated. If the trail rope is used during landing for decelerating the descent prior to touch-down, it must be made of coconut fiber, and for the 1000 m³ balloon it must have a minimum length of 50 m with a rope diameter of at least 30 mm.

For trail rope attachment a crow-foot with toggle and loop is provided at the load ring. At its upper end the trail rope has a strong loop that is toggle-fastened to the crow-foot of the load ring.
During flight the trail rope is kept in the trail rope bag that is attached at the basket, where it is wound up in a coil.

1.5 Holding ropes

The two holding ropes are attached at the upper horizontal joint of the envelope. During inflation these holding ropes are used for limiting the balloon envelope in its lateral movement.
If there is no wind during deflation, the envelope is pulled away over the basket by the holding ropes.

1.6 Parachute rope

The parachute rope is of red color since 2001. The parachute rope serves for opening the parachute in order to let off gas in a controlled manner, and for pulling down the parachute for deflating the balloon. The transition from the valve effect to the deflation effect of the parachute is indicated by a vibration in the parachute rope, if the parachute is not torn open in a sudden movement.
The proper use of the parachute rope must be trained sufficiently together with an instructor.

1.7 Emergency opening rope

The emergency opening is an option. Its command rope is of yellow color. One end is spliced to the emergency opening tongue, the other end runs through a deflection thimble at the outer clamping ring of the appendix into the basket.

1.8 Appendix pull-close rope

The appendix pull-close rope consists of a braided artificial fiber rope. It is attached at the Poeschel-ring, runs in spiral shape around the appendix through a guide ring, and through a deflection thimble at the clamping ring of the appendix. From there it hangs down into the basket and runs back to the Poeschel-ring again. The appendix can either be opened or closed by pulling this rope.

1.9 Appendix anchor line

The two appendix anchor lines are attached to the clamping ring by crow foot and ring nuts. These ropes prevent the lower part of the envelope from turning into the upper one in case of a strong descent. These ropes also prevent the lower part of the envelope from becoming a sail in case the basket is dragged along the ground after landing. Therefore they sometimes are called anti-sail ropes.

1.10 Inflation aid

The inflation aid helps to hold down the envelope at the beginning of the inflation.
The inflation aid consists of a tarp with a belt to connect the envelope and the sandbags.

The belt surrounds the folded envelope at the upper horizontal joint. On one side the belt ends in a steel ring, and at the other end in a piece of pipe. While attaching the belt at the envelope, the rings of the four holding down patches, the ring of the holding rope attachment, and the ring at the other end of the belt are pushed on the pipe in a certain sequence. The rings are kept in their position by use of the securing belt, which is parallel to the pipe, if the securing belt is pushed through the hole at the end of the pipe and blocked by a toggle

The tarp on which the belt is attached serves as a cover for the sandbags, so that the envelope and the sandbags do not touch each other during the release of the envelope.

The sandbags are attached at the tarp by means of two carabineers.

1.11 Instruments

Altimeter

Altimeters measure static air pressure, which decreases with the altitude. Mechanical and electronic altimeters with relevant certification can be used, also, if they meet the needs of operation.

Variometer

Mechanical or electronic variometers are to be used, if they meet the needs of operation.

Compass

There is a great variety of different compass models and usually the compass is part of the private equipment of each balloon pilot.

Chapter 2 – Preventive Maintenance

2.0 Performance of Preventive Maintenance

For EASA operations:
The pilot/owner may perform preventive maintenance mentioned in European Regulation No. 2042/2003 PART M if he/she is holder of a valid pilot license.
For U.S. operations:
The pilot/owner may, if holding a valid pilots certificate, perform preventive maintenance as listed in 14 CFR Part 43.

After conducting preventive maintenance a logbook entry shall be made containing the following information:

- A description of work performed
- The date of completion of the work performed
- The name of the person who performed the work
- Release to Service
  The release has to occur in accordance with FAA Code 14 CFR PART 43 § 43.3 or EASA regulation PART M.

For example the following items may be considered as preventive

maintenance:

- Cleaning and check of the envelope and its ropes
- Removing of dirt and check of load ring and basket
- Replacing of envelope ropes.

A more detailed description of preventive items is to be found in EASA PART M, Annex VIII,
or for U.S. operations in 14 CFR Part 43, Appendix A.

Most repair and maintenance jobs are not considered as preventive maintenance and must be carried out by authorized personnel according FAA code 14 CFR PART 43 § 43.3 for example holder of repair station certificate or analog to the EASA regulation No. 2042/2003 PART M approved organization.
The pilot/owner can perform only preventive maintenance outlined hereafter in paragraphs 2.1 to 2.9.

2.1 Preflight Check

BEFORE EACH FLIGHT check for general integrity:

2.1.1 Envelope

Panels, joints, reinforcements, deflation opening, parachute, load belt, envelope ropes, appendix and emergency opening.

2.1.2 Load Ring

Steel pipe ring, strops and toggles.

2.1.3 Basket

Wooden parts, basketwork, steel ropes, grip line, sand bag line (if existing), sand bag and trail rope bag.
Basket tube frame, belt stiffening and fabric wall cover, when using the fabric walled basket.

2.1.4 Ropes

Parachute rope, emergency opening and appendix ropes.

Note: For details of allowable damage limitations see 2.2 to 2.6

2.2 Envelope

Within the scope of preventive maintenance check for general integrity.

1. Panels	- holes - tears - scratches - moldy areas - any other damage like peeling off of the coating
2. Joints of panels	- holes - loose tapes - any other damage
3. Reinforcements	- loose glued parts - tears - any other damage - damaged patches of inflation aid
4. Deflation opening	- tears - loose glued parts - integrity of the bolt rope and of the reinforcement at the edge of the opening

5. Parachute	- tears, holes - scratches - moldy areas - peeling off of coating - lifting off of fabric reinforcements - tears of fabric reinforcements - integrity of the synthetic fiber rope of the edge (bolt rope) of the parachute and its belts - damaged buckles of the belts - damaged or peeled off attachment points of the centering belts - tightly screwed quick link between pull down belts and parachute rope - damaged parachute rope
6. Load belt	- detached reinforcement - torn seams - deformed stainless steel rings - damaged load tapes
7. Envelope ropes	**- wearing** **- mechanical damage** **- structural change of the braiding** **- any other damage**
8. Appendix	- splintered wooden parts of the clamping rings - screw connections for tight fit - tears, holes, scratches, peeling off of the coating of the fabric and reinforcements - splintered wooden parts of the Poeschel-ring

8. Appendix	- moldy leather straps - damaged strop of the pull-close ropes - incorrect attachment of the pull-close rope - damaged or loose attachment of the appendix anchor lines - if installed: damaged strop with thimble of the emergency opening rope
9. Emergency opening (if installed)	- lifted off reinforcements - broken sealing - torn off Velcro fastener - damaged or not properly applied tape - damaged wooden toggle - damaged command rope

2.2.1 Allowable Damage Limitations

1. Panels	- holes	up to a diameter of 5 mm (0.2”)
	- tears	up to a length of 5 mm (0.2”)
	- scratches	only if the fabric is not hurt
	- moldy areas	up to a stain with a diameter of less than 1 cm (0.4”) and with a distance of more than 10 cm (4”) to the next moldy area and less than 30 x 30 cm (12” x 12”) of the affected area
	- any other damage	none, ask your authorized repair station.

2. Joints of panels	- tears	none
	- loose tapes	inside and outside not more than 5 mm from the edge if the width of the tape is 40 mm (1,6”).Inside and outside not more than 1 mm from the edge if the width of the tape at the outside is 20 mm (0,8”)
	- any other damage	none, ask your authorized repair station
3. Reinforcements	- loose glued parts	up to 3 mm (0.12”) deep and 2.5 cm (1”) long
	- tears	up to a length of 5 mm (0.2”)
	- any other damage	none, ask your authorized repair station
	- patches of inflation aid	none
4. Deflation opening	- tears, holes	none
	- loose glued parts	none
	- integrity of the rope (bolt rope) and rein-forcement at the edge	none
5. Parachute	- integrity	no damage allowed
6. Load belt	- reinforcements lifted off	up to 3 mm (0.12”) deep and 2.5 cm (1”) long
	- torn threads	up to 5 stitches

6. Load belt	- deformed stainless steel ring	up to a difference of 5 mm (0.2”) between big and small diameter
	- damaged load tapes	none, ask your authorized repair station
7. Envelope ropes	- wearing	load bearing cross-section must be more than 70%
	- distortion of structure	2 out of 16 strands can make a loop within a length of 25 cm (10”)
	- any other damage	none, ask your authorized repair station
8. Appendix	- splintered wooden parts	none
	- loose screws	none
	- tears, holes, scratches defective coating	same as envelope panels
	- mold	none
	- incorrect attachments of ropes	none
	- damaged strops of emergency opening and appendix pull-close rope:	none
9. Emergency opening	- lifted off reinforcements	same as other reinforcements
	- broken sealing	none
	- torn off Velcro fasteners	none
	- damaged toggle with command rope	none

2.2.2 Permissible repair work

1. Panels	Pinholes, small tears and scratches of the coating may be provisionally fixed by use of adhesive tape of 10 cm x 10 cm (4” x 4”) over them from the outside. Type of adhesive tape: Tesa No. 4651 or No. 4657. Clean moldy areas by use of a soft brush and let them dry completely
2. Joints	All repairs only by authorized repair station!
3. Reinforcements	Lifted off reinforcements and tears can be covered by use of adhesive tape as described in 1.
4. Deflation opening	All repairs only by authorized repair station!
5. Parachute	All repairs only by authorized repair station!
6. Load belt	Lifted off reinforcements can be covered by use of adhesive tape as described in point 1. Torn threads can be replaced by handmade stitches by use of a polyester thread with a breaking strength of 8.7 daN (18.8 lb).
7. Envelope ropes	For replacing a rope, push one end of the rope through the stainless steel ring at the load belt and through the loop at the other end of the rope and pull through.

8. Appendix	For tears, holes, scratches, and moldy areas follow the description in point 1.
9. Emergency opening	Lifted off reinforcements can be covered by use of adhesive tape as described in point 1. (Panels). To seal the emergency opening proceed as follows: Lay out on a flat surface and pull off the old tape from top to bottom. Place the two parts of the Velcro fastener congruently above each other. Glue a folded strip 10 cm (4”) wide, 10 cm (4”) long of adhesive tape under the upper end of the cover of the emergency opening. Attach it in such a way that the folded edge lies just before the toggle and shows in the direction of the equator. Next, lay on the adhesive tape 10 cm (4”) wide, type: Tesa No. 4651 or 4657 over the edge of the cover, so that the tape lies in the middle. Make sure that the taped areas are clean and dry before application. Attention: The tape must never run over the toggle, because then the emergency opening cannot be opened any more.

2.3 Load ring

Within the scope of preventive maintenance check for general integrity:

1. Steel pipe ring	- circular shape - deformation of the tube - undamaged welding - scratches - defective corrosion protection
2. Strops	- chafe marks - worn binding threads - worn crowfoot of the trail rope
3. Toggles	- cracks, splintered parts - other damage

2.3.1 Allowable damage limitations

1. Steel pipe ring	- circular shape	the difference of crosswise measured diameter of the steel pipe ring must be less than 40 mm (1.6”)
	- deformation of the pipe	the depth of a notch less than 1 mm (0.04”) difference of crosswise measured diameter of the pipe must be less than 5 mm (0.2”)and no cracks must be visible.
	- welding	none
	- scratches	only the corrosion protection coating may be hurt

2. Strops	- chafed	load bearing cross-section must be more than 70%
	- worn binding threads	should be replaced within the next two flights
	- worn crowfoot of the trail rope	load bearing cross-section must be more than 70 %
3. Toggles	- broken	none
	- splintered	only outer rim, load bearing cross-section without damage
	- any other damage	none, ask your authorized repair station!

2.3.2 Permissible repair work

1. Steel pipe ring	- circular shape	none
	- deformation of pipe	none
	- welding	none
	- scratches	small size repair by use of polyurethane lacquer
2. Strops	- chafed	none
	- worn binding threads	none
	- worn crowfoot of the trail rope	must be replace by a new one; link it in the same way and at the same position as the old crowfoot was attached by pulling one end half of the crowfoot through the loop at the other end of the crowfoot.
3. Toggles		none

2.4 Basket

Within the scope of preventive maintenance check for general integrity:

1. Wooden parts	- cracks
2. Basket work	- elasticity and damage - undamaged connection between basket bottom and basket walls. - chafed through in the area of steel ropes
3. Steel ropes	- wear - corrosion at the pressing of the loops for the toggles - undamaged loop - undamaged loop protection - properly attached rope clamp at the bottom - damaged cover
4. Grip line	- damage
5. Sand bag line	- damage
6. Basket edge protection	- wear
7. Sand bag	- rotting - proper attachment

8. Trail rope bag	- damage - proper attachment
9. Basket wall bags	- damage - proper attachment
10. Basket rim padding	- damage
11. Bottom mat	- damage
Additional points when using the fabric walled basket	
12. Fabric wall cover	- damaging, adequate fabric tension
13. Basket tube frame	- damaging
14. Belt stiffening	- damaging, adequate tension

2.4.1 Allowable damage limitations

1. Wooden parts		
Drag laths	-break	none
	-splintered parts	less than 5 by 5 mm (0.2” x 0.2”) square and less than 10 cm (4”) long
	-wearing	less than 5 mm (0.2”) in height over the total width
Cross laths	-break	One break per cross lath, if the two sideward laths are unbroken. Total amount of broken laths less than one fourth of all.

2. Basket-work:	- holes in the wicker should be smaller than 2.5 x 5 cm (1” x 2”).	
	- broken wicker ends should not protrude inside the basket to prevent injuries of passengers.	
3. Steel rope	- break	one broken strand per rope
	- corrosion at the pressing	none
	- loop	no broken single wire in the area where the loop touches the strop of the load ring
	- loop protection	holes less than 5 mm (0.2”)
	- rope clamp	no damage, no corrosion, well tight
	- cover hose	holes less than 5 mm (0.2”)long
4. Grip line	- none	
5. Sand bag line	- none	
6. Basket edge protection	- rips up to a length of 15 cm (6”)	
7. Sandbag	- no rotting - molded areas with less than 2.5 cm (1”) diameter and with a distance of more than 5 cm (2”) to the next molded area, and less than 6 molded areas in total. - no damage at the attachment rope	
8. Trail rope bag	- rips or damaged parts up to a length of less than 5 cm (2”), except the area around the eyelets for rope attachment - no damage at the attachment rope	

9. Basket wall bags	- rips of less than 2.5 cm (1”) length - no damage of the attachment
10. Basket rim padding	- holes and rips less than 1 cm (0.4”) length
11. Bottom mat	- holes less than 2.5 cm (1”) diameter, and tears less than 15 cm (6”) length.
Additional points for fabric walled basket	
12. Fabric wall cover	- holes less than 1,0 cm (0.4”) diameter and rips less than 5 cm (2”) length
13. Basket tube frame	- minor scratches
14. Belt stiffening	- damage up to 20 % of the belt width

2.4.2 Permissible repair work

1. Wooden parts	- none
2. Basket work	- after cutting the broken strands, reweave the wickerwork by use of well soaked rattan. Make sure that no wicker end can protrude inside the basket.

3. Steel rope	- cover the single broken strand by use of adhesive tape to avoid injuring anybody. - replacing of rope clamp by use of the same type and size; tighten the nuts well! - damaged cover hose can be repaired by use of adhesive tape.
4. Grip line	- none
5. Sand bag line	- none
6. Basket edge protection	- cover rips by adhesive tape
7. Sand bag	- sew patches over rotted or moldy areas by hand-made stitches. Use fabric with similar strength and strong yarn; size of patches is double of the stain.
8. Trail rope bag	- same procedure as 7.
9. Basket wall bags	- same procedure as 7.
10. Basket rim padding	- sew rip with strong yarn.
11. Bottom mat	- cover holes by use of adhesive tape.
Additional points for fabric walled basket	
12. Fabric wall cover	- none

13. Basket tube frame	- none
14. Belt stiffening	- none

2.5 Ropes

Within the scope of preventive maintenance check for **general integrity:**

1. Parachute rope	**Same for all ropes:** - wearing - mechanical damage - structural change of braiding or stranding - any other damages
2. Emergency opening rope	
3. Appendix pull-close rope	
4. Appendix anchor ropes	
5. Holding ropes	
6. Trail rope	

2.5.1 Allowable damage limitations

For all ropes	none

2.5.2 Permissible repair work

If a rope is damaged, it must be completely replaced.

1. Parachute rope	Disconnect the old rope by unscrewing the quick link with a fork wrench. Link the new parachute rope to the basket side end of the old rope and pull it **smoothly** through the deflation opening. Connect the pull down belts of the parachute to the loop of the new parachute rope by use of the screwed quick link. Tighten the quick link with a fork wrench
2. Emergency opening rope	none
3. Appendix pull-close rope	Disconnect one end of the rope at the Poeschel-ring and link it to the new rope. Pull the new rope by use of the old rope along the way through eyelet and thimble and attach both ends of the new rope at the same position at the Poeschel-ring as it was before. Use the bowline-knot as shown hereafter. 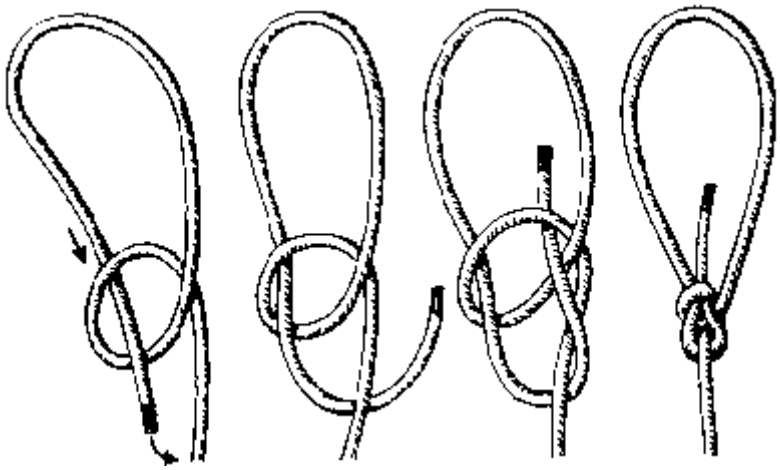 ***bowline***

4. Appendix anchor ropes	Unscrew the ring nut at the clamping ring of the appendix. Pull the crow foot of the appendix rope through the thimble of the appendix rope and do it in the opposite way to attach the new appendix rope. Use a threadlocker as “loctite blue” to keep the ring nuts tight.
5. Holding ropes	Disconnect the screwed quick link of the old holding rope with a fork wrench and attach the quick link of the new holding rope at the stainless steel ring of the holding rope attachment and pull it tight.
6. Trail rope	Attach the new trail rope during rigging of the balloon

2.6 Instruments

If the altimeter and variometer of type WINTER are used, check whether the pointer of the variometer shows zero and whether the ground level is correctly indicated when the present pressure is set.

If instruments of other manufacturers are used, follow their instruction.

2.7 Storage of the balloon

Never store a wet balloon. Dry humid parts immediately! Dry the envelope inside and outside by use of a cold air blower respectively a fan of a hot air balloon.
The storage of the parts is to be made in dry, cool and well ventilated rooms, protected against direct solar radiation.

If the parachute rope got wet, connect it with a simple auxiliary rope of approx.
20 m (65') lengths at the bottom end, and slowly and carefully pull it out through the deflation opening for drying. After drying is finished, the parachute rope can be pulled out downwards through the appendix again by using the auxiliary rope.

Please note: If the parachute rope is not pulled through with corresponding care, it may damage parts of the balloon.

Do not store the basket in heated, dry rooms, because the basket-work dries out too much and thus becomes brittle. It is appropriate to store the basket in upright and elevated position to supply sufficient air to the basket bottom.

2.8 Check after 10 flights

The pilot/owner who holds a valid license or any other person authorized under 14 CFR PART 43 § 43.3 or analog in compliance with EASA regulation 2042 / 2003, PART M must check the balloon after ten flights according to the following list. The balloon must be released for service after passed check. The release must be recorded in the log book.

2.9 Checklist after 10 flights or after a Hard landing

This list should be used for check of integrity after 10 flights respectively after a hard landing.

C H E C K L I S T
after 10 Flights or Hard Landing

Registration n°:	
Model n°: NL-STU/	
Year of manufacturing:	**Total operating time: hours**
Serial n°:	**Total operating time since last inspection hours**

Item	Check for	passed	failed
1. Envelope			
- panels	- holes		
	- tears		
	- scratches		
	- mold		
	- defective coating especially at the changeover to the reinforcements		
-joints	- holes		
	- loose tapes		
glued type	- tapes inside and outside not more than 5mm (0.2”) detached from the edge, if the tapes are 40 mm (1.6”) wide: - the glue tears threads		
welded type	- tapes inside and outside not more than 1mm (0,04”) detached from the edge, if the tapes outside are 20 mm (0,8”) wide.		
- reinforcements	- detachments		
	- tears		
	- abrasion		
	- scratches		
	- mold		
	- defective coating		

C H E C K L I S T
after 10 Flights or Hard Landing

Item	Check for	passed	Failed
- deflation opening	- tears		
	- loose parts		
	- defective coating		
	- integrity of rope of the edge (bolt rope)		
	- envelope ripped longer than 2 mm (0,08”) beneath the rope of the edge (bolt rope)		
	- reinforcements more than 3mm (0.18”) detached at the edges		
- parachute	- holes		
	- tears		
	- abrasion		
	- scratches		
	- mold		
	- defective coating		
	- loose reinforcements		
	- rope of the edge		
	- centering belts		
	- pull-down belts		
	- attachment points of belts		
	- limit tongues and patches with eyelet		
	- buckles		
	- quick link not well tight		
- load belt	- loose reinforcements		
	- torn seams		
	- deformed stainless steel rings		
- envelope ropes	- wearing		
	- hurt, - bearing cross section less than 70%		
	- slings chafed by toggles		
	- distortion of its structure		
	- any other damage		

CHECK LIST
after 10 Flights or Hard Landing

Item	Check for	passed	Failed
- appendix	- tears		
	- holes		
	- mold		
	- attachment, alignment of ropes		
	- wooden rings splintered		
	- loose screw connection		
	- sharp edged metal and wooden parts		
	- damaged appendix slings of emergency opening and pull close rope		
	- damaged Pöschel ring		
	- missing identification plate		
- emergency opening	- loose reinforcements		
	- damaged or not properly applied tape		
	- damaged toggle and command rope		
	- broken sealing		
2. Load ring			
- steel pipe	- circular shape		
	- deformation, notches		
	- weld		
	- scratches, defective corrosion protection		
	- missing identification label		
- strops	- rope strops chafed, bearing cross section less than 70%		
	- chafe marks		
	- worn binding threads		
	- worn crowfoot of trail rope		
- toggles	- cracks, splintered parts		
	- any other damage		
3. Basket			
- wooden parts	- cracks, splintered parts, wear		
	- loose screws		

C H E C K L I S T
after 10 Flights or Hard Landing

Item	Check for	passed	failed
3. Basket (continued)			
- basket work	- connection between wall and bottom damaged		
	- damage along the steel ropes		
	- broken reinforcements of the walls		
	- any other damage		
- steel ropes	- wear, single broken strands		
	- loops and their protection		
	- cover hose		
	- wire rope and pressing		
- grip line	- wear, damage, proper attachment		
- sandbag line (if existing)	- wear, damage, proper attachment		
- edge protection	- wear, damage		
	- rubbed through at the basket bottom		
- rim padding	- wear, damage		
- sandbag	- wear, damage, proper attachment		
- trail rope bag	- wear, damage, proper attachment		
- basket wall bags	- wear, damage, proper attachment		
- bottom mat	- damage		
- ballast bags	- wear, damage, mounting suspension		
- bench mounting	- damaged		
- identification	- missing		

CHECK LIST
after 10 Flights or Hard Landing

Item	Check for	passed	failed
3. Basket, additional tests for fabric walled basket (continued)			
- fabric wall cover	- wear, damage, attachment		
- belt stiffening	- wear, damage, attachment - adequate belt tension		
- basket tube frame	- damage		
4. Ropes			
- parachute rope	- wear, attachment		
	- loose attachment at the parachute		
- emergency opening rope	- wear, attachment		
- appendix pull close rope	- wear, attachment		
- appendix anchor rope	- wear, attachment		
- holding rope	- wear, attachment		
- trail rope	- wear, attachment		
	- bearing cross section more than 25% reduced		
	- binding thread or loop damaged		
5. Inflation aid			
- at envelope	- worn patches, webbings, threads or adjacent areas at patches		
	- deformed stainless steel rings		
6. Instruments	- pointer of variometer shows zero		
	- congruent pressure to altitude indication at altimeter		
	- damaged housing		

7. Inflation test	**THIS IS AN OPTION**		
- with air	- proper fit of parachute in the deflation opening		
- with gas	- right length of ropes		
	- loss of filling gas		
	- strength of suspension		
	- proper function of all components		

Date: …… Checked by: ……

Chapter 3 – INSPECTION AFTER HARD LANDING

3.0 Definition

A Hard Landing has happened if the vertical landing speed was more than 3 m/s or
600 ft/min and /or the horizontal landing speed was more than 20 knots (37 km/h).
After a Hard Landing, the pilot/owner who holds a valid license has to perform the following checks before next flight.

3.1 Check of Integrity

The check has to be performed according the “Checklist after 10 Flights or after Hard Landing (see Chapter 2)

Procedures other than those mentioned in Chapter 2 “Preventive maintenance” must be performed by an authorized repair station or any other certified person according FAA Code 14 CFR PART 43 § 43.3, respectively by EASA PART M approved organizations.

For U.S. operations:

Pilot/owner who holds a valid license may only perform the Preventative Maintenance items as listed in 14 CFR Part 43.

Chapter 4 - AIRWORTHINESS LIMITATIONS SECTION

The Airworthiness Limitation Section of this manual is applicable to all models of the NL-STU certified by

- FAA TC Number: B 03CE
- EASA TC Number: EASA.BA.009
- other NAA's.

The Airworthiness Limitation Section is FAA approved and specifies maintenance required under 14CFR PART 43 § 43.16 and § 91.403 of the Federal Aviation Regulation.

The Airworthiness Limitation Section is EASA approved and specifies maintenance required under European Commission Regulation No. 2042 / 2003, Annex I, PART M.

4.1 Life limited parts

The balloons of the model NL-STU do not have any parts with mandatory replacement time.

4.2 Reduction of inspection intervals

The interval of 5 years has been reduced to 1 year for the Grab test and the test of electric resistivity (see Chapter 5.1.2.1 and 5.1.2.5).
The interval of 10 years has been reduced to 1 year for the Grab test at specific points of the envelope (see Chapter 5.1.1.1).

4.3 Physical limitation of material

The airworthiness needs to be reconditioned if:

- The limit of an allowable damage is exceeded
  e.g. the size of a hole in the envelope, the quantity of broken strands of a suspension rope or the cross section of a worn wooden lath of the basket floor etc.
  For details see Chapter 2 – "Allowable damage limitations" for the relevant parts.

- The result of a test exceeds or underruns the following listed specified values:

  - for fabric (see 5.1.3):
    - Grab test > 210 N (46 lb)
    - tensile strength > 300 N per 5 cm (66 lb per 2”)
    - tear growth > 15 N (3,3 lb)
    - porosity > 175 liter per m² in 24 hours
    - resistivity of fabric ≤ 10^9 Ohm
    - resistivity of connection between parts of envelope ≤ 10^6 Ohm

  - for ropes (see 5.4):
    - tensile strength > 3000 N (675 lb) for envelope ropes, parachute rope, appendix pull close rope, appendix anchor rope, holding rope.
      > 2500 N (560 lb) for trail rope
      > 2000 N (450 lb) for emergency rope
    - resistivity ≤ 10^6 Ohm for all ropes and load belt

Chapter 5 – ANNUAL INSPECTION

This section contains the instructions for maintenance, inspection, and testing that can be performed by an authorized repair station according European Regulation No. 2042/2003, PART M or by the manufacturer or any other person in accordance with FAA 14 CFR PART 43 § 43.3.

The following inspections must be performed at each annual inspection or partly after permanent repair was performed before the balloon is released to service.

5.1 Envelope inspection

Envelope testing and inspection is performed to ensure that the strength and integrity is sufficient for safe operation, no damage or wear is present which would create a hazard, and that previous maintenance has been performed properly.

5.1.1 Testing of the fabric

Testing of the fabric must be performed at each annual inspection

- or if the fabric shows signs of molding or rotting
- or if the fabric is partly hurt by scratches
- or if the coating has peeled off for more than 2.5 x 2.5 cm (1” x 1”)
- or in any other case of doubt concerning the sufficient strength of the fabric

5.1.1.1 Grab test

The Grab test is well known for the annual inspection of hot air balloon fabric. The following test procedure should be used to verify the structural integrity of the balloon envelope fabric during the annual inspection. The intent of this procedure is to insure that the fabric has tensile properties commensurate with requirements imposed by structural loads during balloon operation.

The procedure as outlined herein permits verification of balloon fabric without cutting or removing a test sample from the balloon envelope. The general test method, procedure and results should be comparable to that of test method 5100 of U.S. Federal Standard 191 or of DIN EN ISO 13934-2 standard.

The balloon fabric should be gripped as shown below. Using the rip stop weave pattern as a guide, the jaws should be positioned so that the same yarns, in the test direction, are gripped by both pairs of jaws. The distance between the clamps should be 75 mm or 3”.

The Grab test should be accomplished by gripping the test gauge and applying a smooth, uniform pull force in the test direction. Care should be taken to insure that the force is in line.

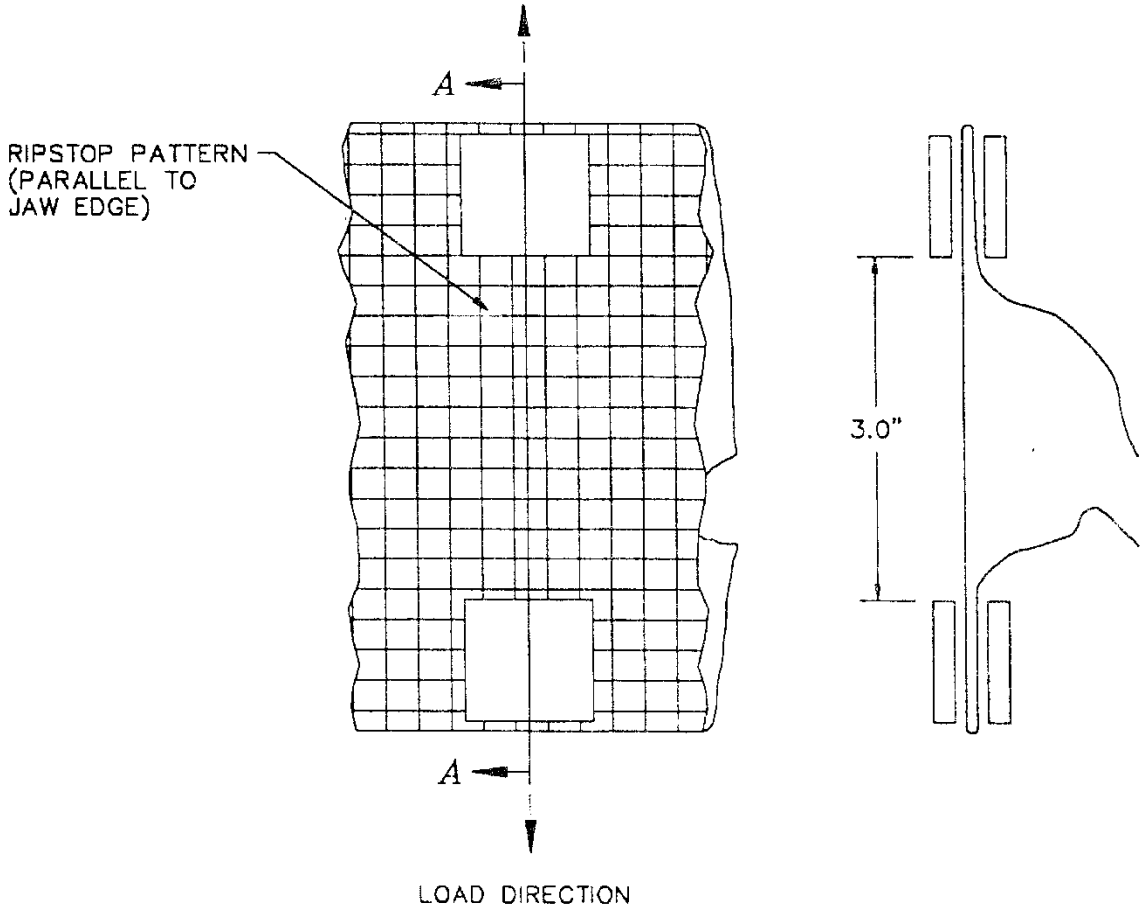

Areas of Grab test performance:

The Grab test must be performed at several places.

I. Deflation Opening

3 times in different panels rectangular to the edge of the reinforcement of the pole. The distance of both clamping devices to the edge of reinforcement should be 30 mm (1.2”).

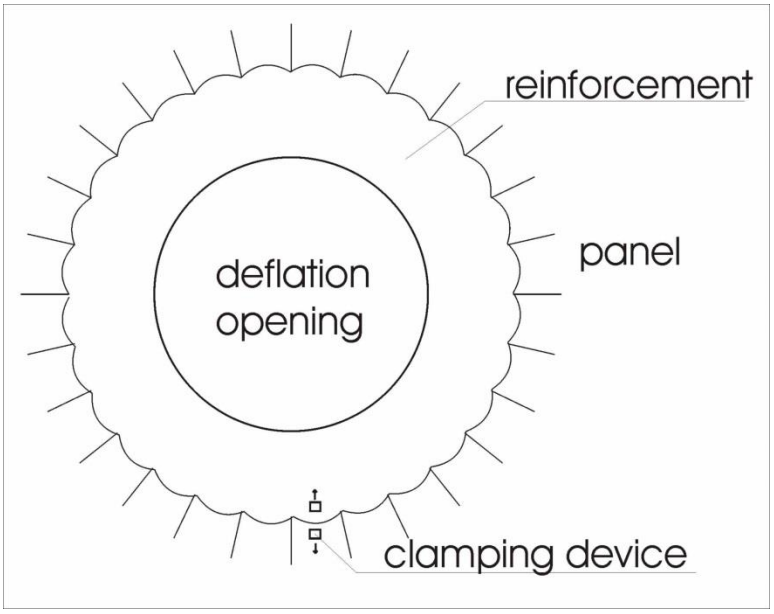

II. Parachute

1 time across the joint. The distance of the clamping devices to the inside tape of the joint should be 30 mm (1.2”).
1 time parallel to the joint. The distance of the clamping devices parallel to the joint should be 30 mm (1.2”).

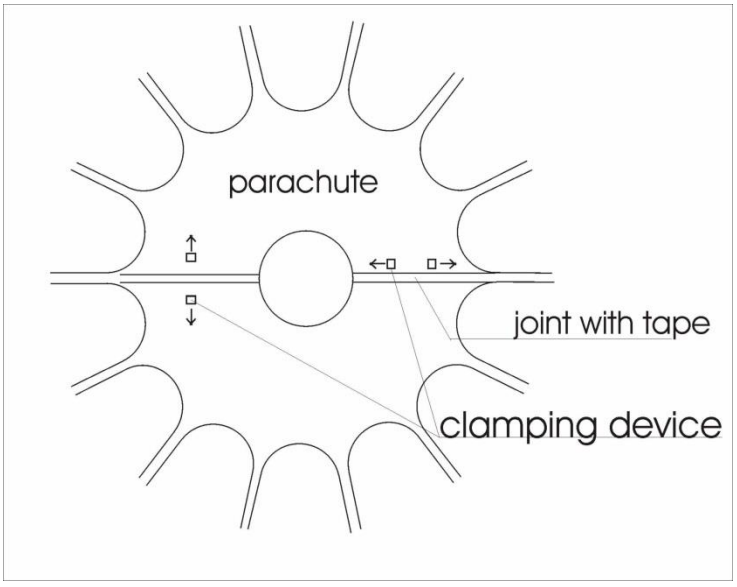

III. Load belt

3 times with a distance of 30 mm (1.2”) parallel to the joints within a distance of 30 cm (12”) over the stainless steel ring.
3 times across the joints within a distance of 30 cm (12”) over the stainless steel ring. The distance of both clamping devices to the tape of the joint should be 30 mm (1.2”).

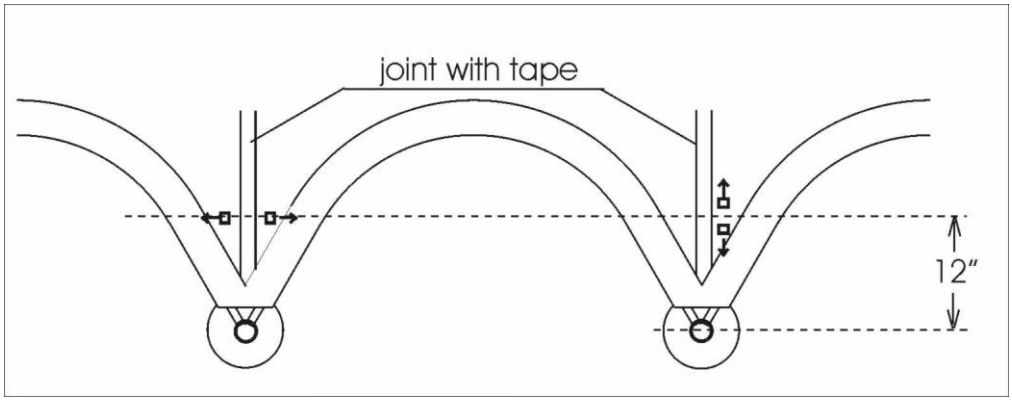

IV. Equator:

3 times across different joints. The distance of the clamping devices to the tapes of the joint should be 30 mm (1.2”).

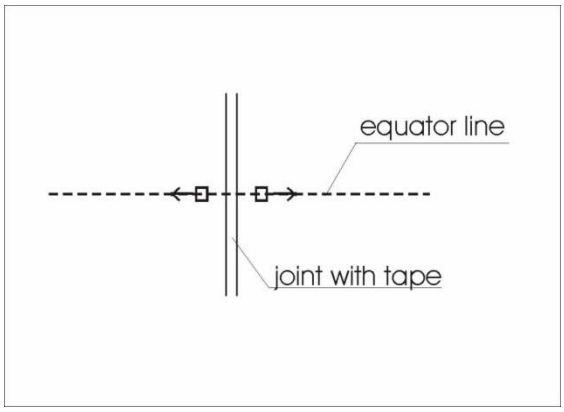

V. Other areas:

Where the envelope shows signs of wear, mold, scratches, or peeling off of coating in warp and filling (weft yarn).

5.1.1.2 Tensile strength test

The other test method for fabric is the tensile test. It has to be performed according to DIN EN ISO 13934-1. Testing according this standard requires laboratory-testing equipment and may only be performed at Ballonbau Wörner GmbH or other appropriately authorized facilities.
The test specimen should be a rectangle of cloth of 25 x 25 cm (10” x 10”) parallel to the warp and another cloth of the same size parallel to the filling (weft yarn).
The test specimen has to be cut out of the envelope at the most worn area and / or between 1 and 2 meters (3’ and 6’) from the deflation opening.

5.1.1.3 Tear growth test

The tear growth test has to be performed according to DIN EN ISO 13937-2. Testing according to this standard requires laboratory-testing equipment and may only be performed at Ballonbau Wörner GmbH or other appropriately authorized facilities.
The tear growth test is performed together with the tensile test. The specimen can be taken from the fabric sample that is used for the tensile test.

5.1.1.4 Porosity test

The porosity test indicates the leakage rate of the balloon fabric. This test has to be performed according to DIN 53 380-2.
The result has to be divided by factor 340 in order to compare it to the limit value of 175 liters per 1 square meter in 24 hours at the pressure difference of 2.94 mbar.
It must be assured if the test is performed according ASTM D 1434-63 that the equipment complies with the demands of DIN 53380-2. The result has to be converted according the chosen pressure difference in order to compare it to the limit value of 175 liters per 1 square meter in 24 hours at the pressure difference of 2.94 mbar.
The testing according DIN and ASTM requires laboratory equipment and should only be performed at Ballonbau Wörner GmbH or other appropriately certified facilities.
The specimen should have no visible hole or patch. It should be taken from an average worn area within a distance of less than 2 meters (6’) from the deflation opening. The size of the specimen is 13 x 13 cm (5” x 5”).

5.1.1.5 Resistivity test (electrostatic conductivity)

Note: The electric conductivity is expressed by its inverse, the electric resistivity.

This test can be done as a field test. If measured values exceed 10^9 Ω at the panels or
10^6 Ω between any conductive parts, testing according to DIN IEC 93 is mandatory. Testing according to DIN IEC 93 requires laboratory-testing equipment and should only be performed at Ballonbau Wörner GmbH or other appropriately authorized facilities.
The measurement has to be performed with a measuring device according to IEC 61557. The measuring voltage must be 500 Volts DC.

The tests have to be performed at:

- 3 x at the panels
- 3 x at the parachute
- 6 x at the deflation opening (between inside and each part of the outer reinforcement)
- 3 x at the stainless steel rings
- 1 x between appendix and envelope
- 1 x at the emergency opening
- and in case of repair between the adjacent area and the replaced part of the envelope

Another test has to be performed at three envelope ropes and according the decision of the inspector at the ropes of the appendix. The resistance of this rope is measured with 100 Volts DC between two alligator clips while the rope is stretched by a load of 1 kg (2.2 lb.). The distance of the clips is 1 m (40”). The squeezing force of the clips should be 8 N (1.8 lb.)

Alternative:

The following set-up is recommended in case the contacting of the conductive fibers is difficult to achieve. Two plates full of water are put on a nonconductive underlay with a distance of at least 1 meter between their inner edges. The rope is placed over the plates in such way that it sinks fully in the water and that the dry length between the plates is minimum 1 m. The measuring tips of the measuring device are dipped in the water and the resistance can be measured.

5.1.2 Frequency of testing

5.1.2.1 Grab test

The test has to be performed annually.

5.1.2.2 Tensile strength test

Has to be performed if the Grab test fails.

5.1.2.3 Tear growth test

Has to be performed if the Grab test fails, additionally to each tensile strength test.

5.1.2.4 Porosity test

Has to be performed

- if the age is more than 15 years or
- if the total operating hours exceed 1,500 hours
- if the loss of filling gas per hour is more than the equivalent of minimum required ballast.
- or if there is a suspicion that the leak rate is too high.

The next test has to be performed

- after 5 years or 2,000 hours of total operating time, if the test result shows a leak rate of less than 10 liters per m^2 in 24 hours at 2.94 mbar.

- every 2 years or after 100 hours, if the test result shows a leak rate of more than 10 liters per m^2 in 24 hours at 2.94 mbar.

5.1.2.5 Resistivity test (electrostatic conductivity)

has to be performed

- at annual inspection
- after repair, if replaced / repaired part is in contact with filling gas
- after a part of discharging path was replaced / repaired, like e.g. electrically conductive thread at the load tapes, or replaced stainless steel rings, envelope ropes, loop protection of basket steel ropes, and so on.

5.1.3 Limiting values

5.1.3.1 Grab test

Each test value has to exceed 210 N (46 lb).

5.1.3.2 Tensile strength test

Each test value has to exceed 300 N per 5 cm (66 lb. per 2”).

5.1.3.3 Tear growth test

Each test value has to exceed 15 N (33 lb)

5.1.3.4 Porosity test

Each test value has to be less than 175 liter per m^2 in 24 hours at 2.94 mbar.

5.1.3.5 Resistivity test

Each measured value has to be equal to or less than 10^6 Ω between two conductive parts of the envelope, and equal to or less than 10^9 Ω at the conductive side of the fabric of each panel.
The envelope ropes are airworthy, if one measurement out of three at a single rope shows a resistance less than 10^6 Ω.

5.1.4 Diagnosis of Airworthiness

If there is only allowable damage

A N D

Grab test - passed → envelope is airworthy
- failed → perform tensile and tear growth test

Tensile and tear growth test - both passed → envelope is airworthy
- one failed → envelope is unairworthy

ADDITIONALLY

Porosity test - passed → envelope is airworthy
- failed → envelope is unairworthy

ADDITIONALLY

Resistivity test - passed → envelope is airworthy
- failed → envelope is unairworthy

Test Flow Chart:

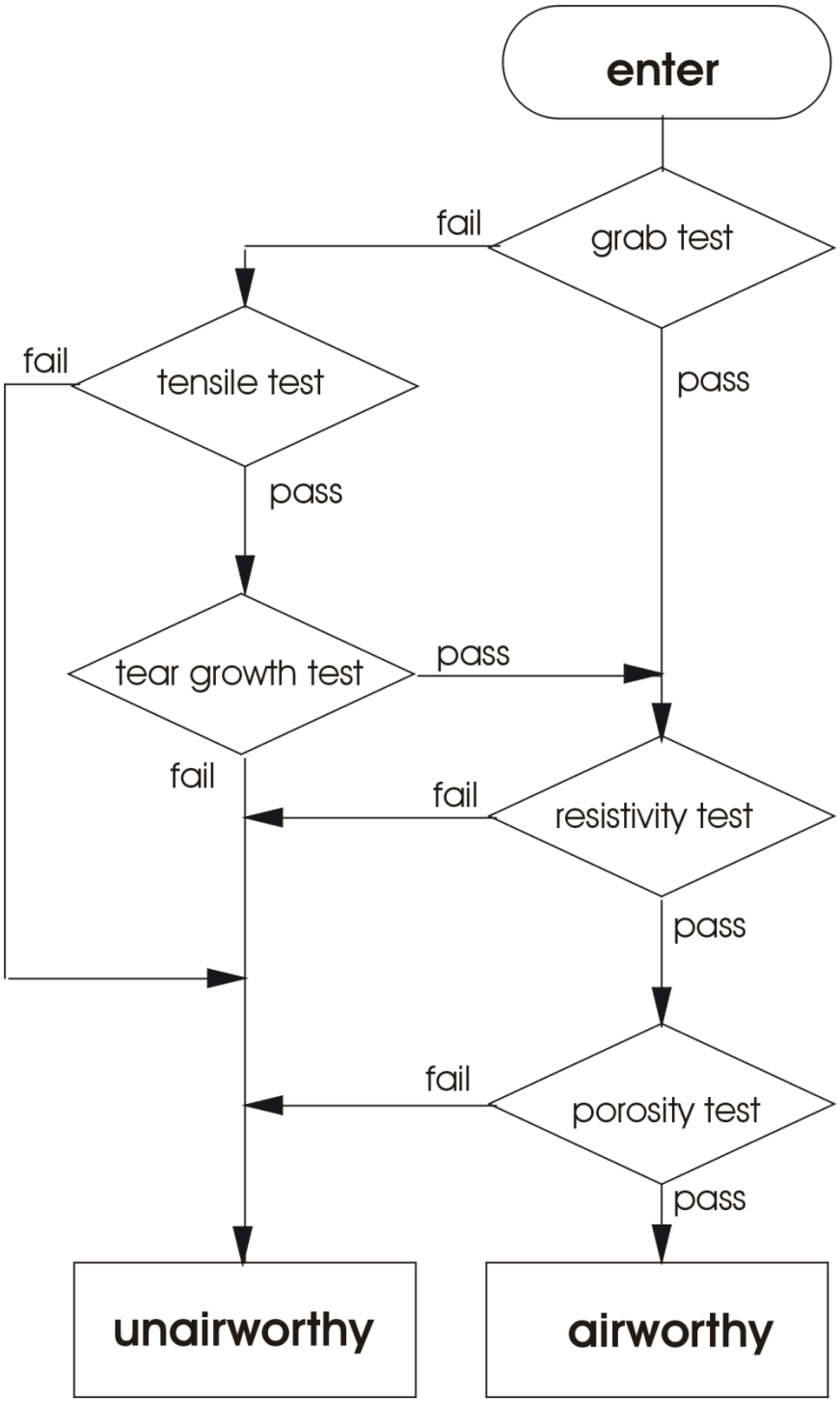

5.1.5 Items of inspection

Temporary repair must be replaced by permanent repair!

Inspect:

1. Panels	- holes, tears, scratches, areas of mold and peeled off coating - strength - porosity - electric resistivity at inside between panels
2. Joints	- holes, loose tapes and any other damage - strength - electric resistivity at inside
3. Reinforcements	- loose glued parts, tears, abrasions, scratches, mold and defective coating - damage at patches of inflation aid - adjacent areas at inflation aid patches
4. Deflation opening	- tears, loose glued parts, defective coating - integrity of the bolt rope and of the reinforcement at the edge of the opening - electric resistivity between inside and outside

5. Parachute	- holes, tears, abrasion, scratches, mold, defective coating, loose reinforcements - integrity of synthetic rope of the edge (bolt rope) of the parachute and its belts - damaged buckles of the belts - damaged or loose attachment points of the centering belts - limit tongues and patches with eyelet - integrity of well-screwed quick link - integrity of parachute rope - electric resistivity between all parts
6. Load belt	- loose reinforcements - torn seams - deformed stainless steel rings - damaged load tapes - electric resistivity between steel rings
7. Envelope ropes	- wearing, cut strands, rupture - distortion of its structure - any other damage, like chemical disintegration caused by contact with fertilizer - electric resistivity
8. Appendix	- tears, holes, scratches, defective coating, mold, - splintered wooden parts - well tightened screws - correct attachment of pull-close rope and anchor lines

8. Appendix	- damaged ropes and slings with thimbles - electric resistivity between envelope and lower end of appendix hose
9. Emergency opening	- loose reinforcements, damaged toggles and command rope - torn off Velcro fastener - improperly applied sealing and tape - electric resistivity between envelope and cover

5.2 Load ring inspection

Temporary repair must be replaced by permanent repair!
Inspect:

1. Steel pipe ring	- circular shape, deformation and welding of the pipe - scratches, and defective corrosion protection
2. Strops	- chafe marks, worn binding threads - worn crow foot of the trail rope
3. Toggles	- cracks, splintered parts, and any other damage

5.3 Basket inspection

Temporary repair must be replaced by permanent repair!

Inspect:

1. Wooden parts	- cracks, splintered parts - wear
2. Basketwork	- damage especially at the connection between walls and bottom and at the line along the steel ropes.
3. Steel ropes	- wear and corrosion at the pressing of the loops for the toggles - damaged loops and their protection - proper attachment of the rope clamp at the bottom - damaged cover-hose
4. Grip line (if existing)	- wear and damage
5. Sandbag line	- wear and damage
6. Edge protection	- wear and damage
7. Sandbag	- rotting, damage, and proper attachment
8. Trail rope bag	- wear, damage, and proper attachment

9. Basket wall bags	- damage and proper attachment
10. Basket rim padding	- wear and damage
11. Bottom mat	- damage and electric resistivity
Additional tests for fabric walled basket	
12. fabric wall cover	- wear, damage, attachment
13. belt stiffening	- wear, damage, attachment - adequate belt tension
14. basket tube frame	- wear, damage, attachment

5.4 Rope inspection

Temporary repair is not allowed.
All ropes must be checked for wear, damage, proper attachment and tensile strength.
The test of the tensile strength must show for:

- Parachute rope	tensile strength more than	3,000 N (675 lb)
- Emergency opening rope	tensile strength more than	2,000 N (450 lb)
- Appendix pull-close rope	tensile strength more than	3,000 N (675 lb)
- Appendix anchor ropes	tensile strength more than	3,000 N (675 lb)
- Holding ropes	tensile strength more	3,000 N (675 lb)

	than	
- Trail rope	tensile strength more than	2,500 N (560 lb)

The tensile strength test can be performed according the valid standard for testing synthetic fiber ropes or by means of a simple pulley block with a tension spring balance. The loops of the rope for fixing the pulley block and the tension spring balance must be performed as a bowline knot.

5.5 Inflation aid inspection

Inspect for damage:

- Adjacent area of the holding down patches and holding rope attachments.
- Patches with stainless steel ring and webbing.
- Threads.
- Reinforcements.

5.6 Instrument inspection

For WINTER instruments:
Leak testing should be carried out at least once a year. Otherwise the instruments do not require any maintenance. On request, WINTER sends the leak test description.
The service condition and accuracy of measurements are normally retained over a long period. Should retesting or repair be necessary, the instruments should be sent to the manufacturer or a suitable repair station. They should be packed to protect them from impacts, and connections should be sealed. Under no circumstances should you interfere with the measuring mechanism of the instruments. WINTER recommends retesting after five years.

If necessary, send the instruments to:

Ballonbau Wörner GmbH
Flughafenstraße 20
D- 86169 Augsburg
Tel: 0049-821-450 406 0 Fax: 0049-821-419 641
E-Mail: info@ballonbau.de
Internet: www.ballonbau.de

Or to:

Gebrüder WINTER GmbH & Co. KG
Hauptstraße 25

D- 72417 Jungingen

Tel: 0049-7444-262 Fax: 0049-7477-1031
E-Mail: Technik@winter-instruments.de
Internet: www.winter-instruments.de

For instruments of other manufacturers follow the recommended maintenance and inspection procedures

It is generally accepted for:

- Altimeter:
  The current barometric pressure and the indication of the altitude must be consistent with the elevation of the place
- Variometer:
  The needle or digital indication must show zero, if the device is on the ground.

5.7 Inflation test

There are two types of inflation test:

- **Air inflation test:**

  The envelope will be inflated by use of a cold air blower for hot air balloons on a smooth surface.

  Attention: Monitor inflation to avoid overpressure!
  The maximal filling gas pressure of 140 Pa is achieved for an envelope of 1,000 m³, when the envelope touches the bottom with a circle of 3.3 m (10') in diameter. The diameter is 2,2m (6.6') for the minimal filling gas pressure of 80 Pa.

  After removing of shoes, inspection personnel can enter the envelope and do the inspection. The fully inflated envelope can be rotated after closing the appendix, and the check of centered and wrinkle free fit of the parachute in the deflation opening from outside is possible. Care must be taken that the attachment of the envelope is suitable for weather conditions, if the test is performed outside and not inside of a suitable shed, which is fairly recommendable.
  If this test is performed in bright light even smallest pinholes become visible. This test is mandatory after repair or replacement of parachute and/or deflation opening.

5.7.1 Gas inflation test:

This test is recommended after large repair works, for instance if complete panels or parts of the load belt were changed. This test proofs the load bearing capacity of all components and the function of all command ropes.

The inflation follows the standard inflation procedure described in the flight manual.

5.8 Check lists for annual inspection

This check list should be used for the annual inspection. This check list presumes familiarity with the details and procedures described in the Maintenance and Repair Manual of Ballonbau Wörner GmbH. For limits of acceptable damage, inspection details, and other information see chapter 2 and chapter 5.

Check for AD's and Service Bulletins.

In case of doubt please contact the manufacturer:

Ballonbau Wörner GmbH

Tel.: 0049 – 821 – 450 406 0

Fax: 0049 – 821 – 41 96 41

E-mail: info@ballonbau.de

The check list is divided into the following sections:

5.1 annual inspection
5.1 inspection after fifteen years (or 1,500 hours)

These lists must be used by the inspector / authorized repair station or EASA PART M approved organization for annual inspection or after repair according to the age of the balloon and the total operating time.

C H E C K L I S T

for annual inspection

Registration No.: ……..... Model No.: NL – STU/……

Year of Manufacturing: …….. Serial No.: ……

Documents:

Standard Airworthiness Certificate ☐

Registration Certificate ☐

Flight Manual ☐

Aircraft Logbook ☐

Total operating time since last annual inspection ….. hours

Total operating time ….. hours

Age: more than 15 years or 1,500 hours of operation ☐

CHECK LIST
for annual inspection

Item	Inspect for	passed	failed
1. Envelope			
- panels	- holes		
	- tears		
	- scratches		
	- mold		
	- defective coating		
	- Grab Test at the equator 3x crosswise to the joint		
	- Grab Test at the load belt 3x parallel to the joint		
	- Grab Test at the load belt 3x crosswise to the joint		
	- 3 x electric resistance measurement $\leq 10^9\ \Omega$		
- joints	- holes		
	- loose tapes		
- reinforcements	- loose parts of fabric, patches, attachments		
	- tears		
	- abrasion		
	- scratches		
	- mold		
	- defective coating		
- deflation opening	- tears		
	- loose parts		
	- defective coating		
	- integrity of edge rope (bolt rope)		
	- resistance $\leq 10^6\ \Omega$, six measurements between inside and outside		
	- Grab Test 3x between reinforcement and envelope		
- parachute	- holes		
	- tears		
	- abrasion		
	- scratches		
	- mold		
	- defective coating		

	- loose reinforcements		

CHECK LIST
for annual inspection

Item	Inspect for	passed	failed
- parachute (continued)	- integrity of synthetic rope of the edge (bolt rope)		
	- centering belts		
	- pull-down belts		
	- attachment points of belts		
	- limit tongues and patches with eyelet		
	- buckles		
	- quick link		
	- Grab test - 1 x parallel to joint		
	- 1 x across the joint		
	- resistance ≤ 10^6 Ω, three measurements across edge of reinforcement		
- load belt	- loose reinforcements		
	- torn seams		
	- deformed stainless steel rings		
	- 3 electric resistance measurements on 2 rings with 5 rings inbetween ≤ 10^6 Ω		
- envelope ropes	- wearing		
	- cut strands		
	- rupture		
	- distortion of its structure		
	- any other damage		
	- tensile strength > 3,000 N (675 lb)		
	- resistance measurements on 3 different ropes≤ 10^6 Ω		
- appendix	- tears		
	- holes		
	- mold		
	- attachment, alignment of ropes		
	- scratches,		
	- defective coating		
	- well tightened screws		
	- resistance ≤ 10^6 Ω, one		

	measurement between inside envelope and lower edge of appendix		
	- electric resistance of the ropes ≤ 10^6 Ω		

CHECK LIST
for annual inspection

Item	Inspect for	passed	failed
- emergency opening	- loose reinforcements		
	- damaged or not properly applied tapes		
	- damaged toggle and command rope		
	- broken sealing		
	- torn off Velcro fastener		
	- 1 x electric resistance measurement between envelope and tongue ≤ 10^6 Ω		
- worn areas	- if necessary, Grab test in both directions		
2. Load ring			
- steel pipe	- circular shape		
	- deformation of pipe		
	- welded seam		
	- scratches, defective corrosion protection		
- strops	- chafe marks		
	- worn binding threads		
	- worn crowfoot of trail rope		
- toggles	- cracks, splintered parts		
	- any other damage		
3. Basket			
- wooden parts	- cracks, splintered parts, wear		
	- screws		
- basket work	- connection between wall and bottom		
	along the steel ropes		
	- any other damage		
- steel ropes	- wear		
	- loops and their protection		
	- cover hose		
	- well tightened rope clamps at the bottom		
	- corrosion at the pressing		
- toggles	- cracks, splintered parts		
	- any other damage		
- grip line	- wear, damage, proper attachment		

- sandbag line (if existing)	- wear, damage, proper attachment		
- edge protection	- wear, damage		
- rim padding	- wear, damage		

CHECK LIST
for annual inspection

Item	Inspect for	passed	failed
- sandbag	- wear, damage, proper attachment		
- trail rope bag	- wear, damage, proper attachment		
- basket wall bags	- wear, damage, proper attachment		
- bottom mat	- damage		
3. Basket, additional tests for fabric walled basket (continued)			
- fabric wall cover	- wear, damage, attachment		
- belt stiffening	- wear, damage, attachment - adequate belt tension		
- basket tube frame	- damage		
4. Ropes			
- parachute rope	- wear, attachment		
	- tensile strength > 3,000 N (675 lb)		
- emergency opening rope	- wear, attachment		
	- tensile strength > 2,000 N (450 lb)		
- appendix pull close rope	- wear, attachment		
	- tensile strength > 3,000 N (675 lb)		
- appendix anchor rope	- wear, attachment		
	- tensile strength > 3,000 N (675 lb)		
- holding rope	- wear, attachment		
	- tensile strength > 3,000 N (675 lb)		
- trail rope	- wear, attachment		
	- tensile strength > 2,500 N (560 lb)		
5. Inflation aid			
- at envelope	- worn patches, webbings, threads		
	- adjacent areas at patches		
	- deformed stainless steel rings		
- tarp	- worn, rotted fabric		

	- worn belt, chafed threads		
	- deformed ring or pipe		
	- worn release belt		
	- worn toggle		
	- damaged carabine hooks		

CHECK LIST
for annual inspection

Item	Inspect for	passed	failed
6. Instruments			
	- pointer of variometer shows zero		
	- congruent pressure to altitude indication at altimeter		
	- damaged housing		
	- leakage test of tube connection or other test recommended by manufacturer		
7. Inflation test	**According to the decision of the inspector**		
	- proper fit of parachute in the deflation opening		
	- right length of all ropes		
	- loss of filling gas		
	- strength of suspension		
	- proper function of all components		

Date: …… Inspected by: ……

C H E C K L I S T

after 15 years or more than 1,500 hours

Item	Inspect for	passed	failed
1. Envelope			
- fabric	porosity test		

Date: …… Inspected by: ……

Chapter 6 – Standard Repair Procedures

6.0 General Information

The repair procedures have to be applied in conformity with Ballonbau Wörner's standards as follows:

Note: Improper replacement / repair will keep the balloon unairworthy.

Warning: Materials or parts must be in accordance with the specifications of type certification. This is assured if parts / replacements from the manufacturer are used.

Warning: Correct conductivity is vital for safe operation of this balloon. Therefore establish it again after each repair / replacement and check it.

In addition reference is made to the corresponding legal regulations of the country where the balloon is registered.

6.1 Envelope

6.1.1 Balloon fabric – Bonding Instruction and Making of Electrostatic Conductivity

Warning: Make sure that the right type of glue is available for repair according the type of coating of the balloon fabric!

Neoprene adhesive has to be used for balloon fabric coated with artificial rubber. It is to be recognized by the 40 mm (1,6") wide outside tape of the joints.

Polyurethane adhesive has to be used for balloon fabric made of Polyurethane coating. It is to be recognized by the 20 mm (0,8") wide outside tape of the joints.

Bonding Instruction

1. Mixing of the adhesive:

The glue is ready for use after adding of the hardener.
Mixing ratio: adhesive : hardener = 10 : 1

Example: 50 g (1,76 oz) of adhesive are mixed with 5 g (0,17 oz) of hardener.

Use a balance with gram indication scale and a solvent resistant tin can and brush.

Stir the adhesive intensively for one minute and never prepare more than 110 g
(3,87 oz).

Note: Close the containers immediately and carefully after withdrawal of glue or hardener. The materials are hygroscopic and could become unusable by the humidity!
Unusable adhesive is visible if
- the bottling date lies back for more than 6 months,
- solvent and adhesive has been separated,
- the consistency is jelly-like.

Unusable hardener is visible if
- white deposition has been formed on the base of the container.

2. Condition of Process:

- Ambient temperature: + 15°C to +35°C (59°F to 95°F)
- Humidity: Evaporating of the solvent has to take place without the formation of condensate on the adhesive.
  Attention: Danger! Bonding with condensate tends to delamination under load!
- Solar radiation: Direct solar radiation onto the adhesive is not permissible.
- Processing time: One to two hours according ambient conditions.

3. Storage:

- Period: Approx. 6 months
- Temperature: Between 5°C and 20°C (41°F and 68°F)

Making of an electrostatically conductive connection

Each patch attached to the inside of the envelope with a surface of more than 100 cm² has to be connected to the envelope by an electrostatic conductive bridge.
The electrostatic conductive material for the bridge has to be obtained by the Ballonbau Wörner GmbH.

Procedure to perform the electrostatic conductive bridge:

- Stir intensively the material before use.

- Paste the material in direction from the envelope towards the patch for more than 2 cm (1”) over the edge of the patch by use of a brush with natural bristles.

- The width of the connection has to be more than 2 cm (1”).

- One electrostatic conductive bridge has to be made per 1,000 cm² (150 sq.in) of surface of the patch.

- The bridges have to be uniformly spread along the edge of the patch.

- Check of the conductivity of the bridge. The electric resistance must not exceed
  10^6 Ohm.

6.1.1.1 Small tears

Small tears up to a length of 5 cm (2”) can be repaired as follows:

1 - Cut out a patch of original balloon fabric that covers the destroyed area with an overlap of 6 cm (2.4“) on all sides.
2 - Attach the patch of original balloon fabric from outside, taking care of the parallel direction of the thread.
3 - For cleaning work and adhesive application, proceed as described in the "medium-sized tears" as below.

6.1.1.2 Medium-sized tears

All the tears up to a total length of 1 m (40”) are referred to as medium-sized tears.
Such tears must not run across joints or in the area of reinforcements.

1 - Put the torn fabric halves together along the tears, and fix them accurately by using a thin adhesive tape on the outside
2 - Clean a width of approx. 10 cm (4“) at the inside of the envelope on both sides of the tear.
3 - Mark the area to which the patch is to be attached in such a way that the patch covers the tear by 6 cm (2.4“) on all sides.
4 - Cut out a patch of suitable size from original balloon fabric. Take care that envelope and patch have the same direction of thread.
5 - Clean the patch on the colored side (=outside), and slightly round off the corners.
6 - Uniformly brush envelope and patch with adhesive. On the envelope, adhesive should be applied over the edge of the marked area.
7 - Repeat adhesive application a second time, when the first adhesive has dried.
8 - When the second adhesive layer has aired, attach the patch to the envelope in accordance with the marking in such a way that the conductive side of the patch is visible.
9 - Tightly press the patch onto the envelope by using a hand roller. Avoid air bubbles and folds when attaching the patch.
10 - Powder the part of the adhesive on the envelope that is not covered by the patch.
11 - Let the repaired location cure for at least 24 hours, before the envelope is bent or loaded in this area.
12 - Remove the fixing adhesive tape on the outside of the envelope, and attach a patch in such a way that the tear is covered by 2 cm (0.8“) on all sides. For this procedure follow the cleaning and adhesive application procedure described before.
13 - The patches on the inside have to be connected electrostatically conductive to the surrounding surface.

6.1.1.3 Large tears

Large tears are tears of more than 1 m (40”) length, and tears that run across joints or occur in the area of reinforcements.
Such tears have to be repaired by Ballonbau Wörner GmbH or by authorized repair stations with personnel that are specifically trained by Ballonbau Wörner GmbH and equipped with appropriate tools. In such repair work both the load bearing structure and the electrostatic conductivity have to be established again and checked.

6.1.1.4 Small, planar damage spots

Small, planar damage spots include:

- Abrasions of the outer coating, and mold stains up to a diameter of 5 cm (2“). Such damage spots are repaired by gluing on a patch from the outside with an
  overlap of 2 cm (0.8“) on all sides.
- Holes up to a diameter of 2 cm (0,8”).

Such holes are repaired by gluing on a patch from the outside with an overlap of 2 cm (0.8“) on all sides.

Bonding instruction according 6.1.1.

6.1.1.5 Medium-sized, planar damage spots

Medium-sized, planar damage spots include:

- Areas with mold formation (larger than those mentioned in 6.1.1.4.) that no longer reach the required minimum tearing strength in warp and weft that is required according to the Grab test.
- Areas where test samples have been removed for performing tearing strength and porosity tests or areas with holes larger than 2cm (1”).

Damage spots of this kind are repaired by attaching patches of original balloon fabric. For this purpose the patches are glued onto the inside of the envelope with an overlap of 2 cm (0.8“) on all sides. The edges of the envelope and of the patch are covered with a 4 cm (1.6“) wide strip of balloon fabric each on the outside and inside. The covering strip has to be placed centrally onto the fabric edge lying below.

For such repair the electrostatic conductivity has to be established and checked.
For bonding instructions and making of electrostatic conductivity see 6.1.1.

6.1.1.6 Large, planar damage spots

Large, planar damage spots include the replacement of envelope parts across joints and reinforcements, or such damage spots that exceed an edge length of 30 x 30 cm (12“ x 12“). Such damage spots have to be repaired by Ballonbau Wörner GmbH or by authorized repair stations with personnel that are specifically trained by Ballonbau Wörner GmbH and equipped with appropriate tools. For this purpose the same procedures have to be used as in the manufacturing of the balloon envelope.

6.1.2 Joints of envelope parts

6.1.2.1 Detached joint cover tapes

Old, detached joint tapes have to be removed. Clean any old adhesive residues from the area of the joint, and attach new joint cover tapes. Bonding instruction see 6.1.1.

It is mandatory since serial number 1087:
Repair of welded joints has to be performed only by use of the certified welding machine according the one, which was used in the process of manufacture.
Welded joints are identifiable by the 20 mm wide joint tape at the outside of the envelope.
Alternatively the repair can be made by the standard repair procedures of rips if the certified type of welding machine is not available.

6.1.2.2 Destroyed joints

Destroyed joints have to be repaired by the Ballonbau Wörner GmbH or by authorized repair stations with personnel that are specifically trained by Ballonbau Wörner GmbH. For this purpose the same procedures have to be used as in the manufacturing of the joints.

6.1.3 Reinforcements

Detached reinforcements up to a depth of 2.5 cm (1“) and a length of 5 cm (2“) may be cleaned and attached again with balloon adhesive. Bonding instructions see 6.1.1.

Larger damage spots have to be repaired by Ballonbau Wörner GmbH or by authorized repair stations with personnel that are specifically trained by

Ballonbau Wörner GmbH and equipped with appropriate tools. Tears in the reinforcements are repaired like tears in the envelope.

6.1.4 Deflation opening

All the components of the deflation opening are important load-bearing components that may only be repaired by Ballonbau Wörner GmbH or by authorized repair stations with personnel that are specifically trained by Ballonbau Wörner GmbH, and with special jigs and fixtures.

6.1.5 Parachute

All the components of the parachute are important load-bearing components that may only be repaired by Ballonbau Wörner GmbH or by authorized repair stations with personnel that are specifically trained by Ballonbau Wörner GmbH, and with special jigs and fixtures. The adjustment of the length of the centering belts requires much routine and detailed knowledge. If the personnel of the authorized repair station do not have such routine and detailed knowledge, the parachute has to be adjusted by the manufacturer.

6.1.6 Load belt

Detachments of the outer reinforcement up to a depth of 1 cm (0.4“) and a length of 2.5 cm (1“) may be cleaned and glued on again according bonding instruction see 6.1.1. Larger detachments, or tears through the belt and the reinforcements lying below it, and the replacement of stainless steel rings, have to be repaired by Ballonbau Wörner GmbH or by authorized repair stations with personnel that are specifically trained by Ballonbau Wörner GmbH. After each and every repair, the electrostatic conductivity has to be established again and checked (see 5.1.1.5. Resistivity test).

6.1.7 Envelope ropes

Envelope ropes that show more damage than permissible has to be replaced completely.

6.1.8 Appendix

The specifications of 6.1.1.1, 6.1.1.2 and 6.1.1.3 also apply to the repair of fabric parts of the appendix. The wood rings can be replaced by installing them in the reverse order of dismantling. After the replacement / repair of parts, the electrostatic conductivity has to be established again according 6.1.1 and checked.

6.1.9 Emergency opening

The specifications of 6.1.1.1 – 6.1.1.3 also apply to the repair of the emergency opening.

6.2 Load ring

If the pipe ring shows impermissible damage or deformation in diameter or cross-section, it cannot be repaired. In such cases it has to be completely replaced.

The strops and toggles may be replaced individually. Because of the complex rope guidance and the splice, such work should only be performed by Ballonbau Wörner GmbH or by authorized repair stations with personnel that are specifically trained by Ballonbau Wörner GmbH. The electrostatic conductivity has to be checked after each repair (see 5.1.1.5. Resistivity test). The taping of the strops can be made by using a 2 mm (0,08”) hemp binding twine. Each turn has to be secured by a simple knot.

6.3 Basket

6.3.1 Wooden laths

Drag laths:

- Laterally splintered off pieces with a maximum cross-section of 2 cm^2 (0.31 sq.inch) and a length of up to 25 cm (10“) can be milled out and replaced by a
  suitable piece of ash wood with waterproof glue.
- Laths that are ground off to a depth of 0.5 cm (0.2“) over the total width can be replaced by a suitable piece of ash wood. Gluing has to be done with waterproof
  glue.
- Laths that are even more ground off or broken have to be replaced. For this purpose the old lath is split horizontally along its middle by means of a corresponding tool. A new two-part lath is then fit in instead of the old one, and the two pieces are joined with waterproof glue. The wood screws for securing the lath against horizontal splitting are screwed in at the predrilled locations in such a way that the top of the screw head lies 0.5 cm (0.2“) deeper than the top of the lath.

Cross laths:

- Broken cross laths are replaced by driving the old lath through the basket-work with the help of the new one. For this purpose the leather protection at the basket edge must be partially removed. Laths must be driven through the basket bottom in such a way that the basket-work is not damaged. Intensive watering of the basket bottom will facilitate this driving work. When lath replacement is finished, the basket bottom must be dried, and then the leather protection must be attached again.

6.3.2 Basket-work

- Horizontal strands:

  The watered rattan strands are braided in at the defective positions in such a way that the beginnings and ends of the parallel overlapping new rattan strands start and end with an offset to each other of 5 cm (2”). The ends must be cut in such a way that they do not constitute any risk of injury for the passengers in the basket.

- Vertical strands:

  At both sides the watered rattan strands are pushed into the undamaged basket-work beside the broken vertical strands. The overlapping above and below of the damaged area should be approx. 10 cm (4“).

- Basket edges:

  If vertical strands are broken in the basket edges between the walls and the bottom, this area has to be reinforced with a 2 mm (0.08”) thick stainless steel rope. The steel rope is braided in instead of the broken vertical strands. In the basket wall the steel rope is run up approx. 15 – 20 cm (6 – 8“), before it runs down around the edge and up again at the adjacent strand.
  In the basket bottom at the narrow side of the basket the steel rope is fastened by winding it around the reinforcement lath of the basket edge. At the wide side of the basket the steel rope is run through the openings in the drag lath. The steel rope ends have to be secured with a steel rope clamp.
  This repair work is permissible for maximally 8 vertical strands lying side by side.

6.3.3 Steel ropes

It is not permissible to repair a steel rope. It has to be completely replaced. This requires facilities for clamping in the basket, and hydraulic cylinders for pulling through the steel rope. If these devices are not available at the authorized repair station, this repair has to be performed by Ballonbau Wörner GmbH.

6.3.4 Grip line

For replacing the grip line, proceed in the reverse order of its dismantling. The line ends must be connected with each other by means of a long splice.

6.3.5 Sand bag line

For replacing the sand bag line, proceed in the reverse order of its dismantling.
The line ends must be connected with each other by means of a long splice.

6.3.6 Basket railing leather

The leather protection of the basket railing can be repaired or replaced by using conventional saddlery procedures.

6.3.7 Sand bag container, trail rope bag, basket bags

Repairs at these parts have to be performed by using identical fabric, threads, eyelets and ropes.

6.3.8 Basket edge protection

When the leather protection is replaced, it has to be tied into the basket-work with an approx. 0.8 cm (0.3“) wide, watered leather strip.

6.3.9 Bottom mat

The bottom mat is made of electrostatically conductive cell foam. When the same material and adhesive is used, it may be repaired by replacing individual parts.

6.3.10 Fabric wall cover (fabric walled basket only)

The cover of the basket walls is made of Cordura-fabric. Cracks, cuts and loosened welds are fixed with a commercial sewing machine. Velcro strips, which are no longer usable, have to be replaced by Ballonbau Wörner GmbH or by authorized repair stations with personnel that are specifically trained by Ballonbau Wörner GmbH.

6.3.11 Belt stiffening (fabric walled basket only)

If the belt stiffening can not guarantee the function or the are stiffening is loosened caused by damage, the repair has to be done by Ballonbau Wörner GmbH or by authorized repair stations with personnel that are specifically trained by Ballonbau Wörner GmbH. Damage which does not affect more than 20 % of the belt width, does not influence the function of the stiffening.

6.3.12 Basket tube frame (fabric walled basket only)

The tube frame consists of stainless steel. Is there any damage the basket tube frame has to be replaced by Ballonbau Wörner GmbH or by authorized repair stations with personnel that are specifically trained by Ballonbau Wörner GmbH.

6.4 Ropes

If necessary, each and every damaged rope has to be completely replaced. It is not permissible to repair ropes.

6.5 Inflation aid

All the parts of the inflation aid that are connected with the tarp may be repaired by using the same materials. Repair work is performed in the reverse order of the dismantling of damaged parts.

6.6 Instruments

Instruments may only be repaired by the respective manufacturer or by a company authorized by the manufacturer.

6.7 Obligations of authorized repair stations

If there are any questions concerning materials or procedures, Ballonbau Wörner GmbH has to be contacted.
Before the balloon is released to service, each and every repair and replacement work has to be checked for strength and proper functioning. This check has to be documented as usual.

Chapter 7 - Part List

Note: All parts without description are manufactured according specifications of Ballonbau Wörner GmbH. These parts are not available on standard market. These parts have to be ordered from Ballonbau Wörner GmbH to assure compliance with the type certificate.

Part	Description	No.
1. Envelope		
- fabric		2100 – 1
- glue		2100 - 2
- joint tape		2100 – 3
- rope		2103 – 20
- conductive paste		2106 - 9
Deflation opening		
- edge protection		2106 – 12
Parachute		
- rope		2101 - 5
Appendix		
- clamping ring inside		2104 – 1
- clamping ring outside		2104 – 2
- flat head screw	steel, zinc plated, 8 mm or 6 mm	2104 – 5
- nut, washer	stainless steel, 8 mm or 6 mm	2104 – 6
- Poeschel-ring		2104 – 10
- rivet	brass, nickel-plated, Ø 2 mm	2104 – 11
- leather strap		2104 – 12
- crow foot		2104 – 13
- anchor rope		2104 – 14
- pull-close rope		2104 – 15
- ring nut	stainless steel, 8 mm or 6 mm	2104 – 17
- patch with eyelet		2104 – 18

Part	Description	No.
Emergency opening		
- thread	298 dtex, cotton-polyester 25/75, core spun	2117 – 4
- Velcro fastener	polyester, Silver-plated, 20 mm wide	2117 – 6
- tape	Tesa tape No. 4651	2117 – 8
- toggle		2117 – 11
- rope		2117 – 12
2. Load ring	I	
- steel pipe ring		2420 – 1
- rope for strop		2420 – 3
- toggle		2420 – 2
- hemp yarn		2420 – 5
- crow foot for trail rope		2420 – 6
3. Basket		
- drag lath		2500 – 1
- cross lath		2500 – 2
- steel rope cover	PVC Ø 13 mm x 2.5 mm	2500 – 7
- steel rope		2500 – 6
- rattan strand	Ø 6 – 8 mm	2500 – 9
- grip line		2500 – 11
- sand bag line		2500 – 11
- edge padding		2500 – 14
- leather protection		2500 – 17
- loop protection		2500 – 15
- sand bag		2500 – 18
- trail rope bag		2500 – 19
- bottom mat	polyethylene 30 mm, electrostatic conductive	2500 – 20
For fabric walled basket only		
- fabric wall cover	Cordura	2513 - 14
- tube frame	Stainless steel	2512 - 3
- belt stiffening	Polyester belt	2513 - 12
- puncture protection	Honeycomb sandwich	2513 - 15
4. Ropes		
- trail rope	Coconut fibre Ø 30 mm	2400 – 8
- holding rope		2107 – 16

Part	Description	No.
5. Inflation aid		
- belt	Polyester 72 mm x 2 mm wide	2107 – 1
- release belt	Polyester 20 mm wide	2107 – 2
- thread	742 dtex polyester, continuous	2107 – 3
- D-ring	steel zinc-plated Ø 6 mm	2107 – 4
- toggle		2107 – 5
- pipe		2107 – 6